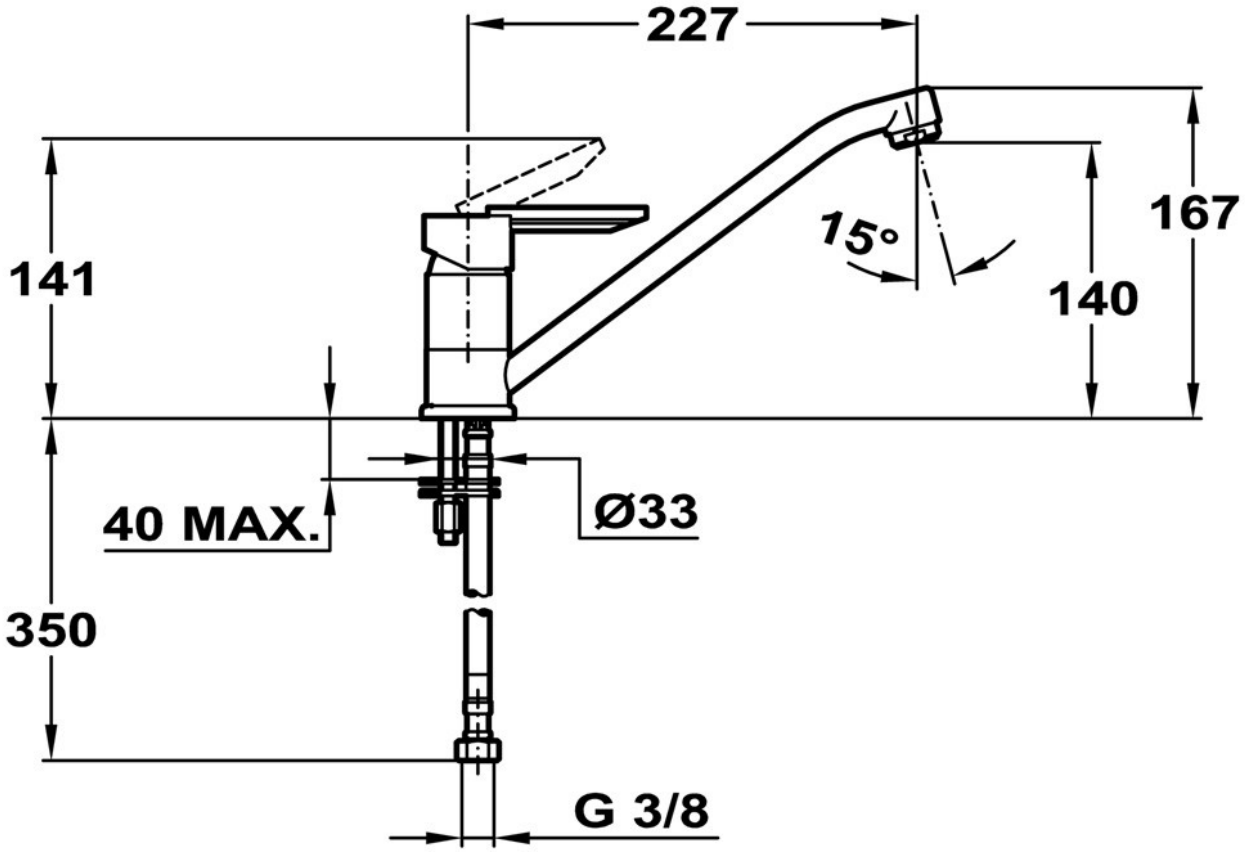
227
167
141
15°
140
40 MAX.
Ø33
350
G 3/8